BRAKES, CALIPER, REAR - Z26S4D92AN/AH/BN/BH (C750115)

2026 RZR - RZR PRO S4 ULTIMATE (R01) - Z26S4D92AN/AH/BN/BH

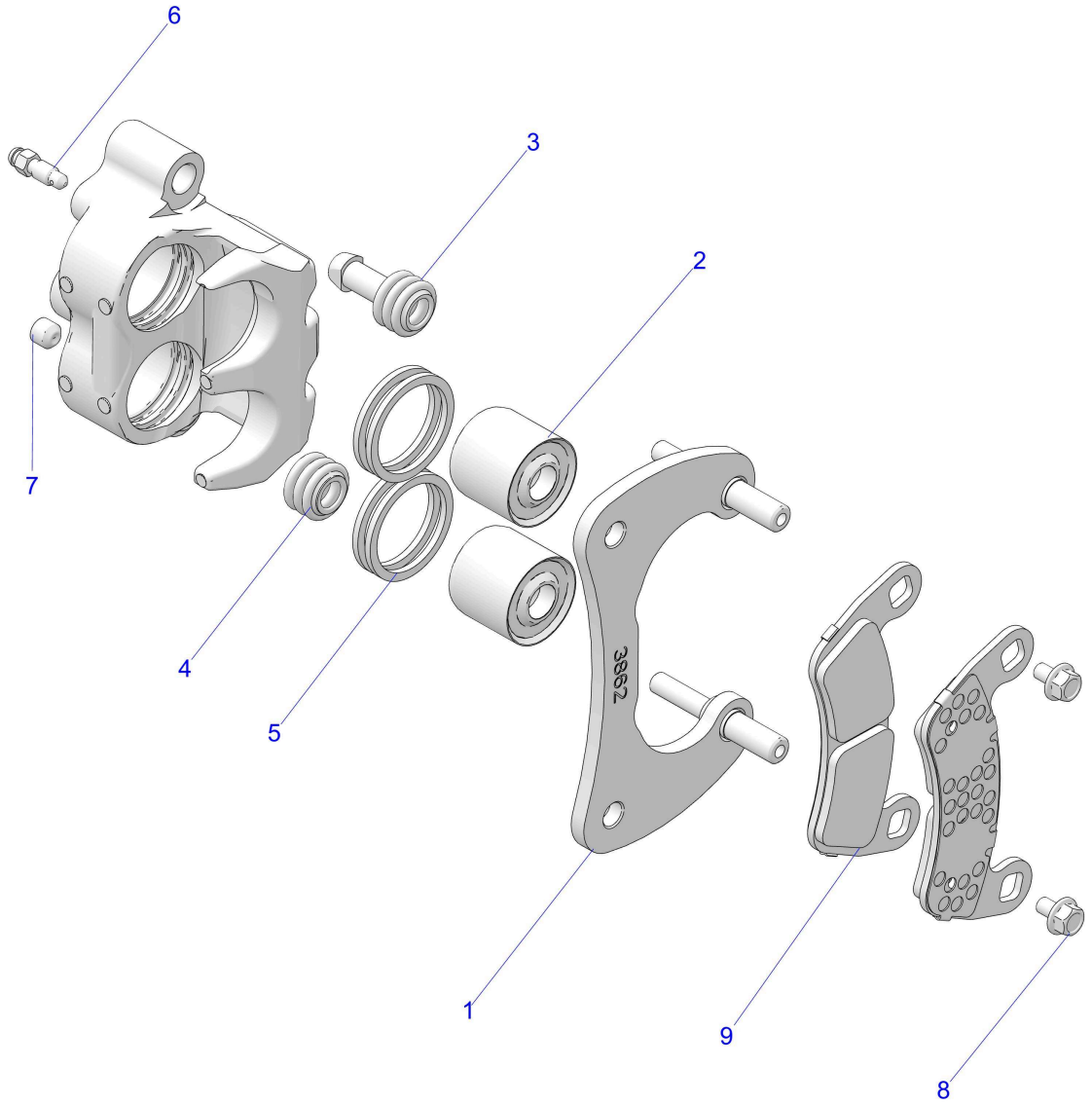

© 2023 Polaris Industries Inc. C750115

Reference #	*Part#*	*Description*	*Quantity*
	1914373	ASM-BRK-CAL-RL-DB,WT [INCL. ALL]	1
	1914374	ASM-BRK-CAL-RR-DB,WT [INCL. ALL]	1
1	1913862	ASM-CAL/MNT,REAR,RZR,74	1
2	5144813	PISTON-1-1/2 SS	2
3	5412505	BOOT-PIN BUSHING	1
4	5412506	BOOT-PIN SEAL	1
5	5412907	SEAL-CALIPER,INNER,1.375"	4
6	7081343	SCR-M7X1.0,BLEEDER,OLIVE D	1
7	7518863	SCR-M10X1.0X8,SOC SET-OD	1
8	7521328	SCR-HXFL-M6X1.0X10 8.8 ZF	2

9	2211643	K-PRO-R/TURBO-R R-PADS [INCL. QTY 2 BRAKE PADS][INCL. 8]	1

Copyright 1996-2026 Polaris Industries U.S.A All rights reserved.